Instruction

1.

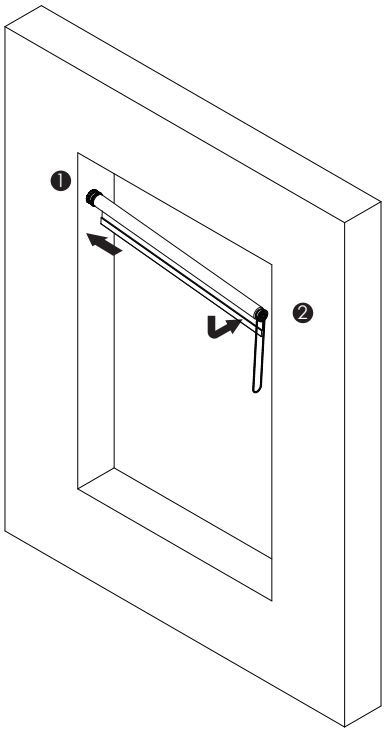

2.

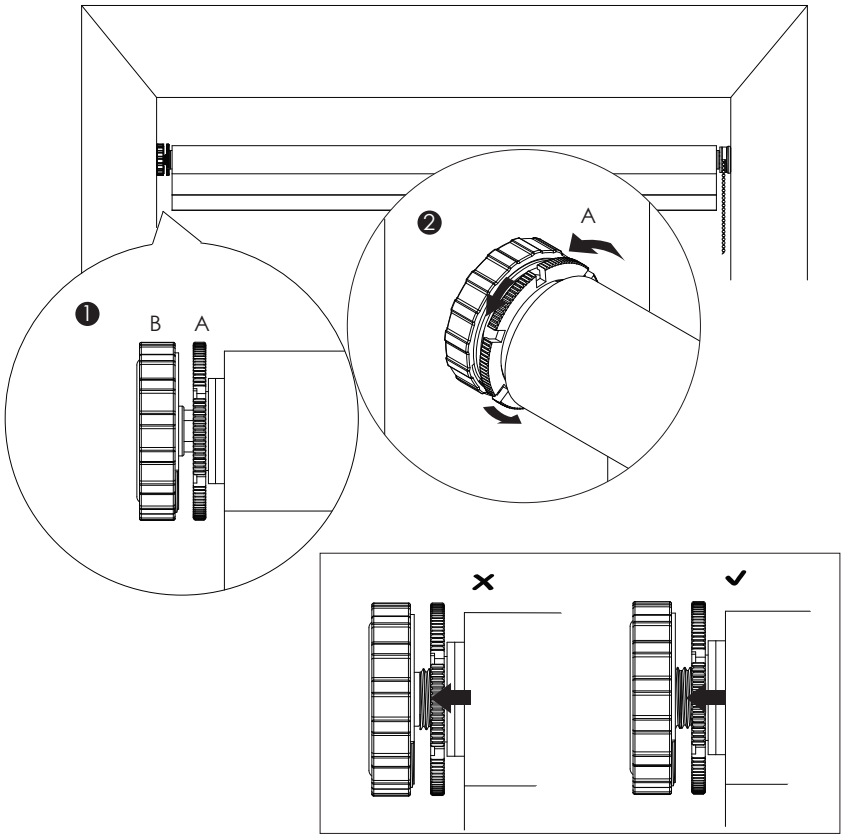

3.

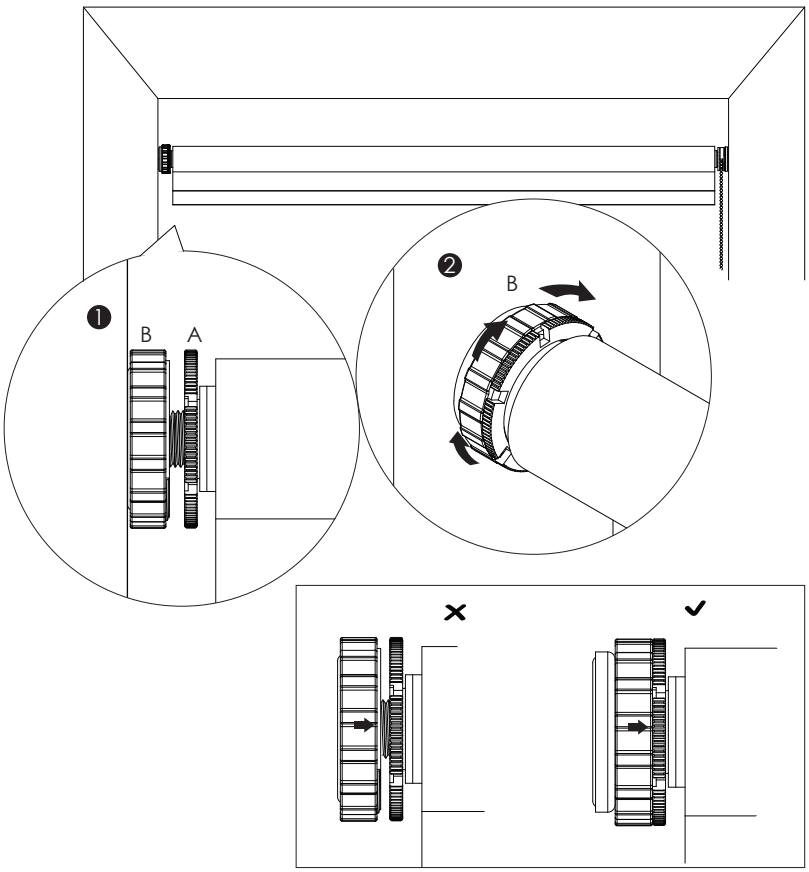
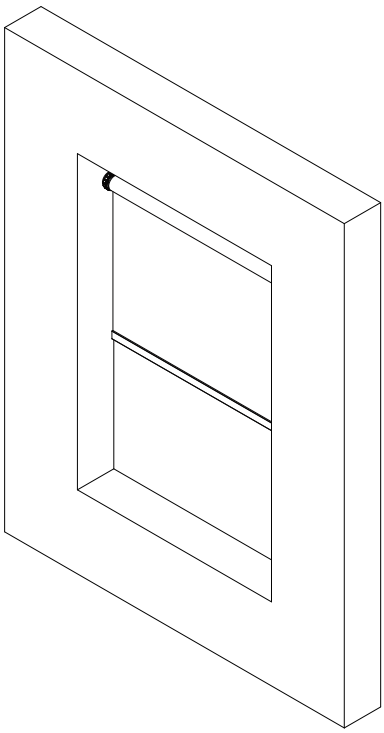
4.